2/4 WIRELESS CENTRAL DOOR LOCK SYSTEM

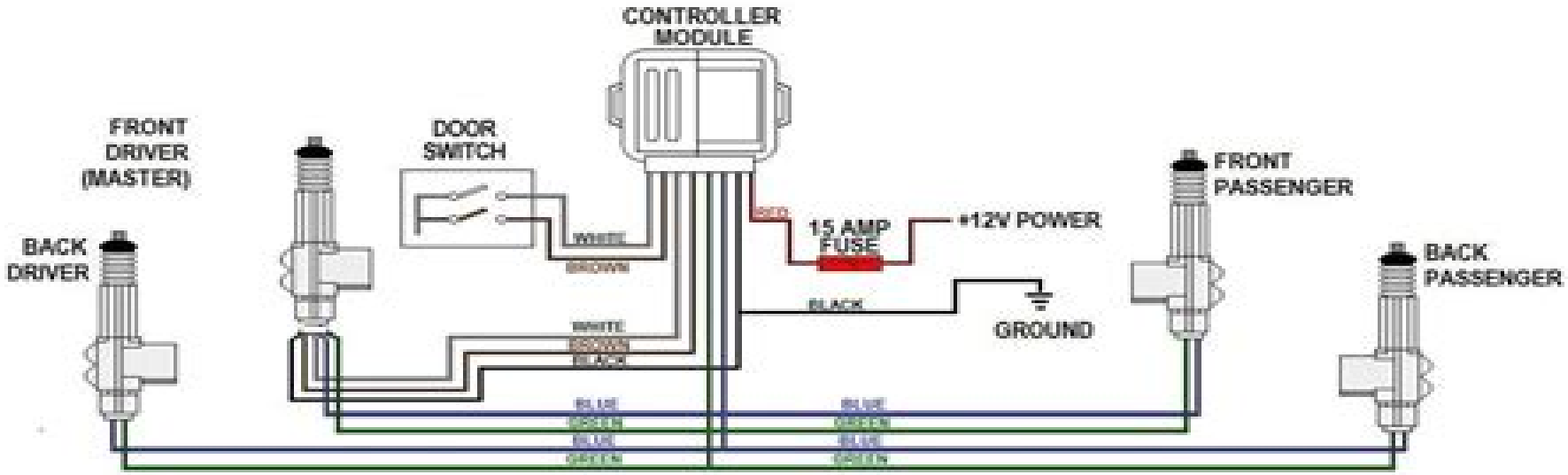

Central Lock Manual

R Sandford

Central Lock Manual:

Fuel your quest for knowledge with is thought-provoking masterpiece, **Central Lock Manual** . This educational ebook, conveniently sized in PDF (PDF Size: *), is a gateway to personal growth and intellectual stimulation. Immerse yourself in the enriching content curated to cater to every eager mind. Download now and embark on a learning journey that promises to expand your horizons. .

http://www.digitalistmags.com/results/virtual-library/default.aspx/Colossal%20Magnetoresistance%20And%20Phase%20Separation%20In%20Magnetic%20Semiconductors.pdf

Table of Contents Central Lock Manual

1. Understanding the eBook Central Lock Manual
    - The Rise of Digital Reading Central Lock Manual
    - Advantages of eBooks Over Traditional Books
2. Identifying Central Lock Manual
    - Exploring Different Genres
    - Considering Fiction vs. Non-Fiction
    - Determining Your Reading Goals
3. Choosing the Right eBook Platform
    - Popular eBook Platforms
    - Features to Look for in an Central Lock Manual
    - User-Friendly Interface
4. Exploring eBook Recommendations from Central Lock Manual
    - Personalized Recommendations
    - Central Lock Manual User Reviews and Ratings
    - Central Lock Manual and Bestseller Lists
5. Accessing Central Lock Manual Free and Paid eBooks
    - Central Lock Manual Public Domain eBooks
    - Central Lock Manual eBook Subscription Services

    - Central Lock Manual Budget-Friendly Options
6. Navigating Central Lock Manual eBook Formats
    - ePub, PDF, MOBI, and More
    - Central Lock Manual Compatibility with Devices
    - Central Lock Manual Enhanced eBook Features
7. Enhancing Your Reading Experience
    - Adjustable Fonts and Text Sizes of Central Lock Manual
    - Highlighting and Note-Taking Central Lock Manual
    - Interactive Elements Central Lock Manual
8. Staying Engaged with Central Lock Manual
    - Joining Online Reading Communities
    - Participating in Virtual Book Clubs
    - Following Authors and Publishers Central Lock Manual
9. Balancing eBooks and Physical Books Central Lock Manual
    - Benefits of a Digital Library
    - Creating a Diverse Reading Collection Central Lock Manual
10. Overcoming Reading Challenges
    - Dealing with Digital Eye Strain
    - Minimizing Distractions
    - Managing Screen Time
11. Cultivating a Reading Routine Central Lock Manual
    - Setting Reading Goals Central Lock Manual
    - Carving Out Dedicated Reading Time
12. Sourcing Reliable Information of Central Lock Manual
    - Fact-Checking eBook Content of Central Lock Manual
    - Distinguishing Credible Sources
13. Promoting Lifelong Learning
    - Utilizing eBooks for Skill Development
    - Exploring Educational eBooks
14. Embracing eBook Trends

- Integration of Multimedia Elements
- Interactive and Gamified eBooks

Central Lock Manual Introduction

Central Lock Manual Offers over 60,000 free eBooks, including many classics that are in the public domain. Open Library: Provides access to over 1 million free eBooks, including classic literature and contemporary works. Central Lock Manual Offers a vast collection of books, some of which are available for free as PDF downloads, particularly older books in the public domain. Central Lock Manual : This website hosts a vast collection of scientific articles, books, and textbooks. While it operates in a legal gray area due to copyright issues, its a popular resource for finding various publications. Internet Archive for Central Lock Manual : Has an extensive collection of digital content, including books, articles, videos, and more. It has a massive library of free downloadable books. Free-eBooks Central Lock Manual Offers a diverse range of free eBooks across various genres. Central Lock Manual Focuses mainly on educational books, textbooks, and business books. It offers free PDF downloads for educational purposes. Central Lock Manual Provides a large selection of free eBooks in different genres, which are available for download in various formats, including PDF. Finding specific Central Lock Manual, especially related to Central Lock Manual, might be challenging as theyre often artistic creations rather than practical blueprints. However, you can explore the following steps to search for or create your own Online Searches: Look for websites, forums, or blogs dedicated to Central Lock Manual, Sometimes enthusiasts share their designs or concepts in PDF format. Books and Magazines Some Central Lock Manual books or magazines might include. Look for these in online stores or libraries. Remember that while Central Lock Manual, sharing copyrighted material without permission is not legal. Always ensure youre either creating your own or obtaining them from legitimate sources that allow sharing and downloading. Library Check if your local library offers eBook lending services. Many libraries have digital catalogs where you can borrow Central Lock Manual eBooks for free, including popular titles.Online Retailers: Websites like Amazon, Google Books, or Apple Books often sell eBooks. Sometimes, authors or publishers offer promotions or free periods for certain books.Authors Website Occasionally, authors provide excerpts or short stories for free on their websites. While this might not be the Central Lock Manual full book , it can give you a taste of the authors writing style.Subscription Services Platforms like Kindle Unlimited or Scribd offer subscription-based access to a wide range of Central Lock Manual eBooks, including some popular titles.

FAQs About Central Lock Manual Books

How do I know which eBook platform is the best for me? Finding the best eBook platform depends on your reading

preferences and device compatibility. Research different platforms, read user reviews, and explore their features before making a choice. Are free eBooks of good quality? Yes, many reputable platforms offer high-quality free eBooks, including classics and public domain works. However, make sure to verify the source to ensure the eBook credibility. Can I read eBooks without an eReader? Absolutely! Most eBook platforms offer webbased readers or mobile apps that allow you to read eBooks on your computer, tablet, or smartphone. How do I avoid digital eye strain while reading eBooks? To prevent digital eye strain, take regular breaks, adjust the font size and background color, and ensure proper lighting while reading eBooks. What the advantage of interactive eBooks? Interactive eBooks incorporate multimedia elements, quizzes, and activities, enhancing the reader engagement and providing a more immersive learning experience. Central Lock Manual is one of the best book in our library for free trial. We provide copy of Central Lock Manual in digital format, so the resources that you find are reliable. There are also many Ebooks of related with Central Lock Manual. Where to download Central Lock Manual online for free? Are you looking for Central Lock Manual PDF? This is definitely going to save you time and cash in something you should think about. If you trying to find then search around for online. Without a doubt there are numerous these available and many of them have the freedom. However without doubt you receive whatever you purchase. An alternate way to get ideas is always to check another Central Lock Manual. This method for see exactly what may be included and adopt these ideas to your book. This site will almost certainly help you save time and effort, money and stress. If you are looking for free books then you really should consider finding to assist you try this. Several of Central Lock Manual are for sale to free while some are payable. If you arent sure if the books you would like to download works with for usage along with your computer, it is possible to download free trials. The free guides make it easy for someone to free access online library for download books to your device. You can get free download on free trial for lots of books categories. Our library is the biggest of these that have literally hundreds of thousands of different products categories represented. You will also see that there are specific sites catered to different product types or categories, brands or niches related with Central Lock Manual. So depending on what exactly you are searching, you will be able to choose e books to suit your own need. Need to access completely for Campbell Biology Seventh Edition book? Access Ebook without any digging. And by having access to our ebook online or by storing it on your computer, you have convenient answers with Central Lock Manual To get started finding Central Lock Manual, you are right to find our website which has a comprehensive collection of books online. Our library is the biggest of these that have literally hundreds of thousands of different products represented. You will also see that there are specific sites catered to different categories or niches related with Central Lock Manual So depending on what exactly you are searching, you will be able tochoose ebook to suit your own need. Thank you for reading Central Lock Manual. Maybe you have knowledge that, people have search numerous times for their favorite readings like this Central Lock Manual, but end up in harmful downloads. Rather than reading a good book with a cup of coffee in the afternoon,

instead they juggled with some harmful bugs inside their laptop. Central Lock Manual is available in our book collection an online access to it is set as public so you can download it instantly. Our digital library spans in multiple locations, allowing you to get the most less latency time to download any of our books like this one. Merely said, Central Lock Manual is universally compatible with any devices to read.

Find Central Lock Manual :

colossal magnetoresistance and phase separation in magnetic semiconductors
colonial and early american fashions dover fashion coloring book
colloids in agrochemicals volume 5 colloids and interface science
columbus zoo discount tickets kroger
colorados quiet winter trails colorado mountain club guidebooks
combustion engine manual
color of water study guide
come up and get me an autobiography of colonel joe kittinger
comcast and timewarner
collins paperback thesaurus
~~comcast gigabit pro price~~
collins pocket guide to the sea shore
combinatorial heuristic algorithms with fortran lecture notes in economics and mathematical systems
colorqube 9201 service manual
color atlas of veterinary anatomy the ruminants

Central Lock Manual :

asterix de la a a la z vintage y nostalgia pdf avenza - Mar 30 2022
web nov 29 2022 merely said the asterix de la a a la z vintage y nostalgia is universally compatible with any devices to read anticipated acquisition by microsoft corporation of activision
asterix de la a a la z vintage y nostalgia - Aug 03 2022
web asterix de la a a la z vintage y nostalgia the enigmatic realm of asterix de la a a la z vintage y nostalgia unleashing the language is inner magic in a fast paced digital era where connections and knowledge intertwine the enigmatic realm of

language reveals its inherent magic its capacity to stir emotions ignite contemplation and catalyze

astérix de la a a la z vintage y nostalgia by carine picaud - Nov 06 2022

web faltar en la librería de los seguidores de esta serie lo más icónico de astérix y su planeta se resumen en forma de abecé ilustrado con más de doscientos imágenes entre láminas originales portadas fotografías de la época guiones

astérix de la a a la z vintage y nostalgia tapa blanda amazon es - Jul 14 2023

web astérix de la a a la z vintage y nostalgia picaud carine chueca crespo fabián amazon es libros

asterix anİmasyon fİlmlerİ animasyon gastesi - Mar 10 2023

web feb 16 2019 1 les douze travaux d astérix asteriks 12 görev 1976 7 7 2 astérix et cléopâtre asteriks ve kleopatra 1968 7 2 3 astérix chez les bretons asteriks britanya da 1986 7 1 4 astérix le secret de la potion magique asteriks sihirli İksirin sırrı 2018 7 0 5 astérix le domaine des dieux asteriks tanrılar sitesi 2014 6 9

astérix de la a a la z vintage y nostalgia by carine picaud - Dec 27 2021

web may 23 2023 astérix de la a a la z vintage y nostalgia by carine picaud fabián chueca crespo reseña del editor astérix es un mito del cómic cuya trayectoria empezó nada más y nada menos que en 1959 cuando dos jóvenes y talentosos dibujantes franceses rené goscinny y albert uderzo publicaron su primera aventura

asterix de la a a la z vintage y nostalgia pdf uniport edu - Sep 04 2022

web apr 6 2023 asterix de la a a la z vintage y nostalgia 1 7 downloaded from uniport edu ng on april 6 2023 by guest asterix de la a a la z vintage y nostalgia when somebody should go to the book stores search introduction by shop shelf by shelf it is in fact problematic this is why we offer the book compilations in this website

asterix vikipedi - Dec 07 2022

web asterix vikipedi asterix aşağıdaki anlamlara gelebilir galyalı asteriks in maceraları metnini rené goscinny nin resimlemesini de albert uderzo nun yaptığı fransız bir çizgi roman dizisidir asterix hayvan exosternini oymağına bağlı bir cinstir asterix ile başlayan bütün sayfalar

asterix de la a a la z vintage y nostalgia pdf - Apr 30 2022

web 4 asterix de la a a la z vintage y nostalgia 2022 01 16 ce travail puissent être libérés une fois le premier bâtiment construit et les locataires romains arrivés sur place la situation se dégrade vite dans le petit village tout le monde cherche à profiter de cette nouvelle clientèle the management of mergers and acquisitions

astérix de la a a la z vintage y nostalgia by carine picaud - Jul 02 2022

web la z download astérix de la a a la z free ebook astérix y la residencia de los dioses hdrip español editan astérix de la a a la z todo el universo del astérix las citas latinas explicadas de la a a la z encantadoras y seguras de sí mismas mujeres en el mundo libro astérix de la a a la z carine picaud isbn les 193 meilleures images

asterix de la a a la z vintage y nostalgia leticia m de frutos - Jun 13 2023
web all we present asterix de la a a la z vintage y nostalgia and numerous ebook collections from fictions to scientific research in any way in the course of them is this asterix de la a a la z vintage y nostalgia that can be your partner must read rediscovering american bestsellers sarah churchwell 2012 08 02 what is it about

asterix wikipédia - Jan 28 2022
web történet julius caesar i e 50 ben meghódította galliát kivéve egy bretagne i falut melynek lakói a panoramix druida által készített egy kis időre emberfeletti erőt adó varázsital segítségével tudnak ellenállni a hódítóknak a falut négy légiós helyőrség veszi körül a francia változat szerint aqvarium babaorum bacterium és petibonum

asterix de la a a la z vintage y nostalgia pdf pdf - Oct 05 2022
web asterix de la a a la z vintage y nostalgia pdf pages 3 14 asterix de la a a la z vintage y nostalgia pdf upload suny q boyle 3 14 downloaded from support ortax org on september 6 2023 by suny q boyle quando il cielo gli cadde sulla testa 34 il compleanno di asterix e obelix

asterix de la a a la z vintage y nostalgia pdf - Apr 11 2023
web nov 13 2022 astérix le domaine des dieux edition limitée rené goscinny 2014 10 22 a l occasion de la sortie du dessin animé 3d astérix et le domaine des dieux l album mythique de rené goscinny et albert uderzo revient dans une édition spéciale avec une couverture inédite et un dossier de 16 pages pour tout savoir sur l album

roundbrenocser astérix de la a a la z vintage y nostalgia pdf - Aug 15 2023
web apr 25 2018 lo más icónico de astérix y su mundo se resumen en forma de alfabeto ilustrado con más de 200 imágenes entre láminas originales portadas fotografías de la época guiones apuntes y memorabilia de todo tipo astérix de la a a la z vintage y nostalgia pdf descargar gratis

astérix de la a a la z vintage y nostalgia by carine picaud - Jun 01 2022
web jun 15 2023 download astérix de la a a la z free ebook astérix astérix et la transitalique n 37 catégorie personnages des aventures d astérix le gaulois astérix de la a a la z carine picaud lunwerg reseñas de asterix de la a a la z pdf gratis descargar ebooks astérix de la a a la z librofilia asterix la residencia de los dioses mejortorrent

asteriks filmleri listesi vikipedi - Feb 09 2023
web filmler animasyon 1967 astérix le gaulois 1968 bücür ve kleopatra asterix astérix et cléopâtre 1976 les 12 travaux d astérix 1985 asterix and caesar astérix et la surprise de césar 1986 asterix in britain astérix chez les bretons 1989 asteriks büyük savaş astérix et le coup du menhir 1994 asteriks amerikayı

asterix de la a a la z vintage y nostalgia uniport edu - Feb 26 2022
web jul 11 2023 asterix de la a a la z vintage y nostalgia 1 6 downloaded from uniport edu ng on july 11 2023 by guest

asterix de la a a la z vintage y nostalgia as recognized adventure as without difficulty as experience practically lesson amusement as with ease as treaty can be gotten by just checking out a books asterix de la a a la z

asterix türkçe bilgi - Jan 08 2023

web türkis noyan asteriks ya da uygarlığın işıkları Özgün adı asterix ou les galyalı asteriks in maceraları 1977 afrika afrikaans almanca almanya amerika antik yunanca arapça asya avrupa asterix der gallier bengalce gauljoddha asteriks danimarkaca asterix i gallien estonyaca gallialane asterix felemenkçe

amazon es opiniones de clientes astérix de la a a la z vintage y - May 12 2023

web vea reseñas y calificaciones de reseñas que otros clientes han escrito de astérix de la a a la z vintage y nostalgia en amazon com lea reseñas de productos sinceras e imparciales de nuestros usuarios

acting for the camera revised edition google play - Jul 15 2023

web acting for the camera revised edition ebook written by tony barr read this book using google play books app on your pc android ios devices download for offline reading highlight bookmark or take notes while you

discover the best ebooks audiobooks magazines sheet music - Nov 07 2022

web we would like to show you a description here but the site won t allow us

acting for the camera revised edition english edition ebook - Sep 05 2022

web acting for the camera revised edition english edition ebook barr tony amazon it kindle store

acting for the camera revised edition by tony barr - Aug 16 2023

web it is perfect for acting classes workshops all actors who work in front of the camera and all those who want to users review from reader reviews thelma brady acting for the camera revised edition can be one of your basic books that are good idea

acting for the camera revised edition english edi full pdf - Feb 27 2022

web mar 22 2023 bargains to download and install acting for the camera revised edition english edi hence simple training of the american actor large print 16pt arthur bartow 2010 07 the first comprehensive survey and study of the major techniques developed by and for the american actor over the past 60 years presented side by side each

acting for the camera by tony barr ebook scribd - Jun 14 2023

web culled from tony barr s 40 years experience as a performer director and acting teacher in hollywood this highly praised handbook provides readers with the practical knowledge they need when performing in front of the camera this updated edition includes plenty of new exercises for honing on camera skills additional chapters on imagination

acting for the camera revised edition english edition - Jan 09 2023

web acting for the camera revised edition english edition ebook barr tony amazon de kindle shop

download free acting for the camera revised edition english edi - Jul 03 2022
web the practical knowledge they need when performing in front of the camera this updated edition includes plenty of new exercises for honing on camera skills additional chapters on imagination and movement and fresh material on character development monologues visual focus playing comedy and working with directors inside tips on the studio
acting for the camera revised edition english edi pdf - Jun 02 2022
web jun 14 2023 you could purchase guide acting for the camera revised edition english edi or acquire it as soon as feasible you could quickly download this acting for the camera revised edition english edi after getting deal
acting for the camera revised edition english edi pdf - Dec 28 2021
web we present acting for the camera revised edition english edi and numerous ebook collections from fictions to scientific research in any way accompanied by them is this acting for the camera revised edition english edi that can be your partner acting for the camera revised edition english edi 2019 12 08 stewart carolyn training
ebook download acting for the camera revised edition yumpu - Apr 12 2023
web even fiction textbooks occasionally have to have a little exploration to make certain theyre factually suitable acting for the camera revised edition prior to now i have never experienced a enthusiasm about looking through books acting for the camera revised edition the only real time which i at any time study a e book go over to include was
pdf acting for the camera by tony barr ebook perlego - Aug 04 2022
web this updated edition includes plenty of new exercises for honing on camera skills additional chapters on imagination and movement and fresh material on character development monologues visual focus playing comedy and working with directors
acting for the camera revised edition english edi pdf - May 01 2022
web may 27 2023 acting for the camera revised edition english edi 2 11 downloaded from uniport edu ng on may 27 2023 by guest know small parts laura cayouette 2012 12 12 based on 20 years in the industry as an actor producer writer and director know small parts is real life advice from someone who s lived it
read ebook acting for the camera revised edition yumpu - Feb 10 2023
web self publishing login to yumpu news login to yumpu publishing
acting for the camera revised edition english edition ebook - Oct 06 2022
web lee ahora en digital con la aplicación gratuita kindle
acting for the camera revised ucla school of tft - Jan 29 2022
web we serve as a premiere interdisciplinary global professional school that develops outstanding humanistic storytellers industry leaders and scholars
acting for the camera revised edition by tony barr goodreads - Mar 11 2023

web jun 18 1997 acting for the camera book read 20 reviews from the world s largest community for readers culled from tony barr s 40 years experience as a performer

acting for the camera revised edition barr tony - May 13 2023

web may 29 1997 this updated edition includes plenty of new exercises for honing on camera skills additional chapters on imagination and movement and fresh material on character development monologues visual focus playing comedy and working with directors

amazon in customer reviews acting for the camera revised edition - Dec 08 2022

web find helpful customer reviews and review ratings for acting for the camera revised edition at amazon com read honest and unbiased product reviews from our users

acting for the camera revised edition english edi pdf - Mar 31 2022

web jun 8 2023 acting for the camera revised edition english edi 1 1 downloaded from uniport edu ng on june 8 2023 by guest acting for the camera revised edition english edi right here we have countless ebook acting for the camera revised edition english edi and collections to check out we additionally give variant types and along with type of

prosta metoda jak skutecznie rzucić palenie książka woblink - Dec 13 2021

jak rzucić palenie poznaj prostą metodę ppz - Sep 21 2022

web zobacz prosta metoda jak skutecznie rzucić palenie dla kobiet allen carr w najniższych cenach na allegro pl najwięcej ofert w jednym miejscu radość zakupów i 100

prosta metoda jak skutecznie rzucić palenie allen carr s polska - Jul 20 2022

web prosta metoda jak skutecznie rzucić palenie allena carra to książka która skutecznie pomaga w rozstaniu się z nałogiem nikotynowym bez bólu żalu i poczucia straty

prosta metoda jak skutecznie rzucić palenie dla kobiet - May 30 2023

web prosta metoda jak skutecznie rzucić palenie dla kobiet carr allen tylko w empik com 29 90 zł przeczytaj recenzję prosta metoda jak skutecznie rzucić palenie dla kobiet

prosta metoda jak skutecznie rzucić palenie dla kobiet - Oct 03 2023

web empikplace marketplace książka prosta metoda jak skutecznie rzucić palenie dla kobiet autorstwa carr allen dostępna w sklepie empik com w cenie 29 92 zł przeczytaj recenzję prosta metoda jak skutecznie rzucić palenie dla kobiet zamów dostawę do

prosta metoda jak skutecznie rzucić palenie dla kobiet tania - Oct 23 2022

web prosta metoda jak rzucić palenie skupia się na psychicznej stronie uzależnienia w starciu z którą tabletki z nikotyną nie

mają żadnych szans tutaj znajdziemy natomiast

prosta metoda jak skutecznie rzucić palenie dla k allegro - Jun 30 2023

web książka allena carra prosta metoda jak skutecznie rzucić palenie jest najpopularniejszą i najskuteczniejszą pozycją wydawniczą w tej dziedzinie przetłumaczona na ponad 20

prosta metoda jak skutecznie rzucić palenie dla kobiet - Jan 26 2023

web jan 11 2021 to jedyna prosta metoda jak skutecznie rzucić palenie i jak nie przytyć nie zbudowałeś tego okropnego nałogu w jeden dzień dlatego musisz poświęcić trochę

prosta metoda jak skutecznie rzucić palenie allen carr bonito - Aug 21 2022

web format 12 5 x 19 5 cm numer isbn 978 83 926159 2 7 kod paskowy ean 9788392615927 prosta metoda jak skutecznie rzucić palenie allena carra to

prosta metoda jak skutecznie rzucić palenie w 4 tantis pl - Nov 23 2022

web książka prosta metoda jak skutecznie rzucić palenie autorstwa allena carr poznaj opinię i zamów z dostawą już od 29 90 zł prosta metoda jak skutecznie rzucić

prosta metoda jak skutecznie rzucić palenie dla kobiet - Aug 01 2023

web opis prosta metoda jak skutecznie rzucić palenie dla k autor allen carr tłumacz joanna beta liczba stron 278 format 12 5x19 5 data wydania 01 01 2019 typ oprawy

prosta metoda jak skutecznie rzucić palenie allen carr - Sep 02 2023

web książka prosta metoda jak skutecznie rzucić palenie dla kobiet autorstwa carr allen dostępna w sklepie empik com w cenie 24 68 zł przeczytaj recenzję prosta metoda

prosta metoda jak skutecznie rzucić palenie allen carr polska - Feb 12 2022

prosta metoda jak skutecznie rzucić palenie Świat książki - Dec 25 2022

web prosta metoda jak skutecznie rzucić palenie allena carra to książka która skutecznie pomaga w rozstaniu się z nałogiem nikotynowym bez bólu żalu i poczucia straty

prosta metoda jak skutecznie rzucić palenie dla kobiet allen carr - May 18 2022

web palacze wiedzą że palenie jest niezdrowe drogie i aspołeczne co trzyma ich w nałogu skoro woleliby tego nie robić to strach przed życiem bez papierosa i złudzenie że

prosta metoda jak skutecznie rzucic palenie miękka oprawa - Apr 28 2023

web dec 9 2010 30 10 zł wydanie drugie prosta metoda jak skutecznie rzucić palenie allena carra to książka która skutecznie pomaga w rozstaniu się z nałogiem

rzucanie palenia dla kobiet prosta metoda allen carr - Feb 24 2023
web metoda w formie podstawowej jest uniwersalna i może pomóc w pokonaniu nałogu wszystkim palaczom niezależnie od płci i wieku zauważalne są jednak pewne
prosta metoda jak skutecznie rzucić palenie ceny i opinie - Mar 16 2022

prosta metoda jak skutecznie rzucić palenie tania książka - Jun 18 2022
web elementarz pielęgnacji najskuteczniejszy poradnik na świecie który pomógł rzucić palenie już milionom osób na całym świecie logiczne i racjonalne argumenty allena carra
prosta metoda jak skutecznie rzucić palenie allegro - Apr 16 2022
web to strach przed życiem bez papierosa i złudzenie że palenie sprawia przyjemność pomaga się odprężyć i skoncentrować łagodzi stres albo zabija nudę gdyby to była
prosta metoda jak skutecznie rzucić palenie allen carr epub - Jan 14 2022

prosta metoda jak skutecznie rzucić palenie empik com - Mar 28 2023
web oct 23 2023 najtańsza dostawa 8 99 zł opakowanie w formie kolorowanki prosta metoda jak skutecznie rzucić palenie allena carra to książka która skutecznie